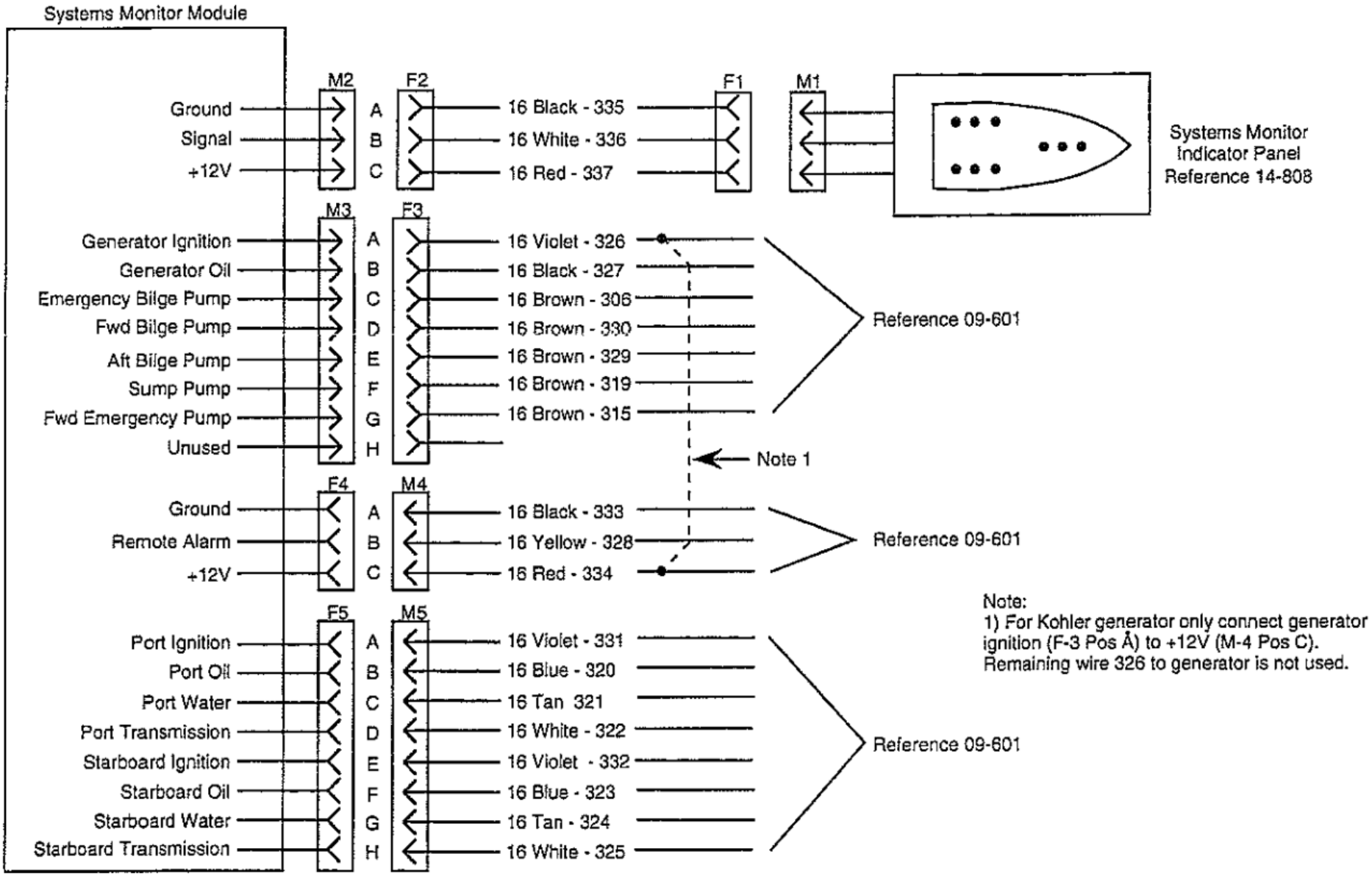Systems Monitor Wiring